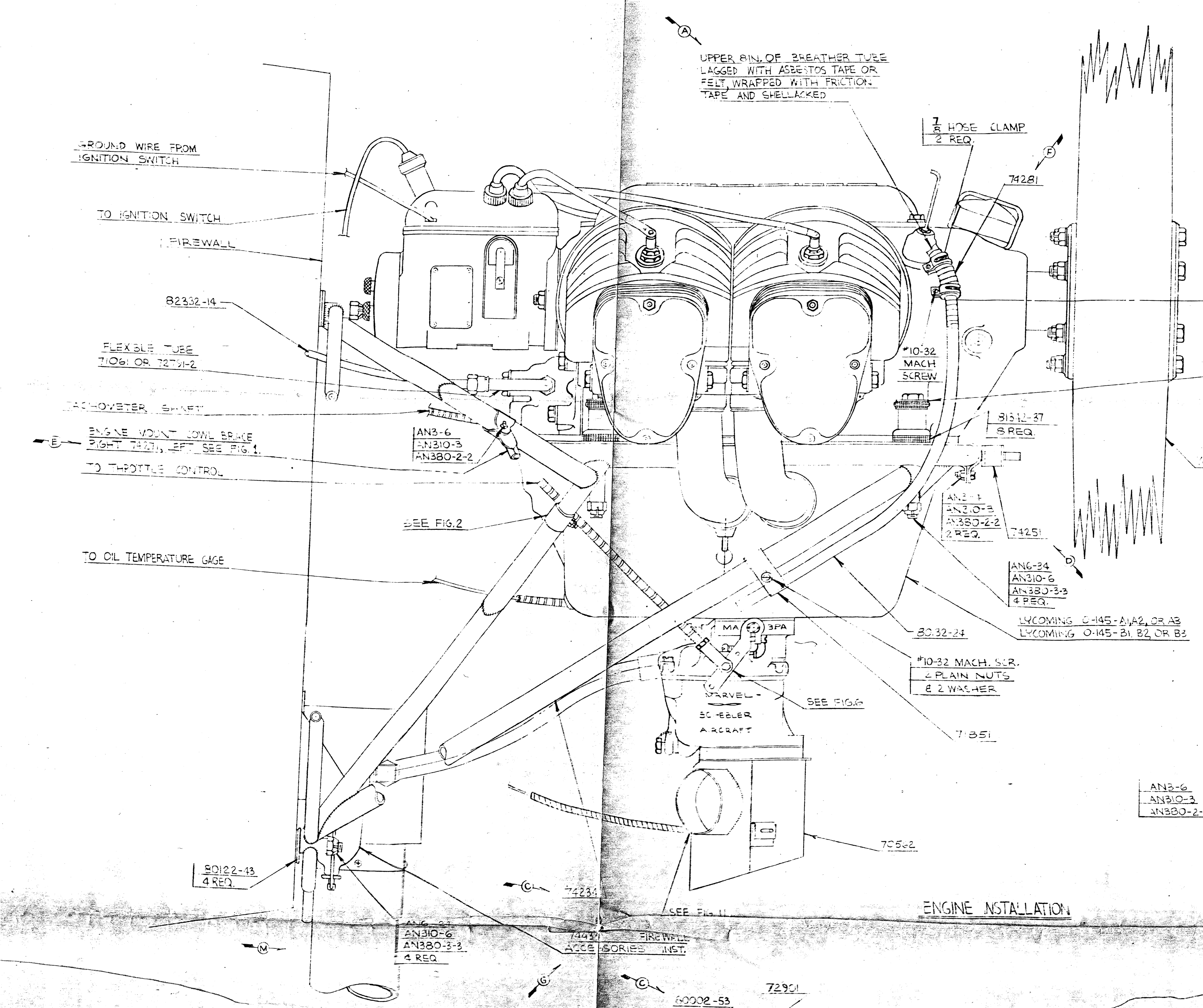
UPPER 8IN. OF BREATHER TUBE LAGGED WITH ASBESTOS TAPE OR FELT, WRAPPED WITH FRICTION TAPE AND SHELLACKED
7/8 HOSE CLAMP 2 REQ.
74281
GROUND WIRE FROM IGNITION SWITCH
TO IGNITION SWITCH
FIREWALL
82332-14
FLEXIBLE TUBE 71061 OR 72791-2
TACHOMETER SHAFT
ENGINE MOUNT COWL BRACE RIGHT 74271, LEFT SEE FIG. 1.
AN3-6
AN310-3
AN380-2-2
TO THROTTLE CONTROL
SEE FIG. 2
TO OIL TEMPERATURE GAGE
#10-32 MACH SCREW
1/32 WASHER FURNISHED WITH ENGINE
81342-37 8 REQ.
70-LY-34 PROPELLER
AN3-4
AN310-3
AN380-2-2
2 REQ.
74251
AN6-34
AN310-6
AN380-3-3
4 REQ.
LYCOMING O-145-A1, A2, OR A3
LYCOMING O-145-B1, B2, OR B3
80132-24
#10-32 MACH. SCR. 4 PLAIN NUTS & 2 WASHER
MARVEL-SCHEBLER AIRCRAFT
SEE FIG. 6
71851
70562
80122-43 4 REQ.
74234
SEE FIG. 11
AN6-24
AN310-6
AN380-3-3
4 REQ
74433 FIREWALL ACCESSORIES INST.
A
B
C
D
E
F
G
M

ENGINE INSTALLATION

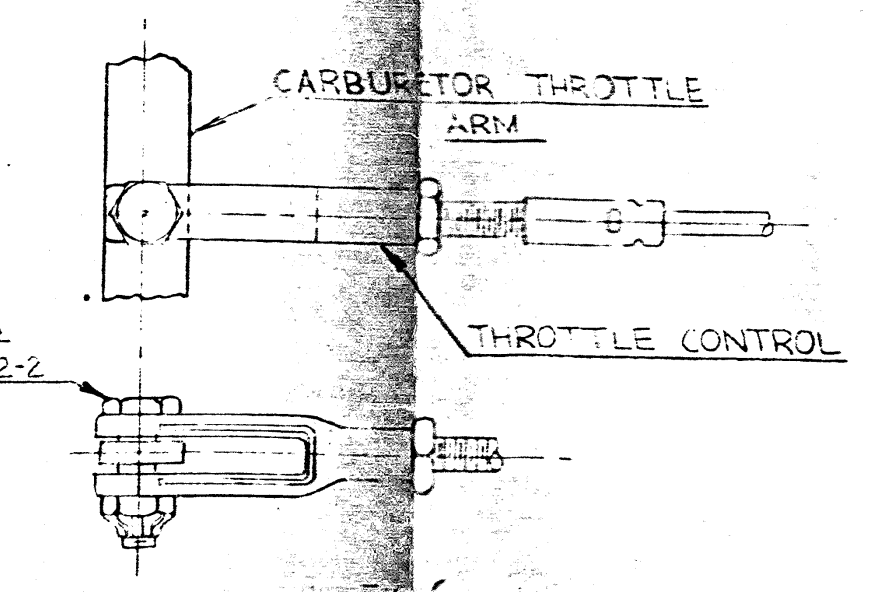
CARBURETOR THROTTLE ARM
THROTTLE CONTROL
AN3-6
AN310-3
AN380-2-2

FIG. 6
THROTTLE CONTROL ATTACHMENT
FULL SIZE

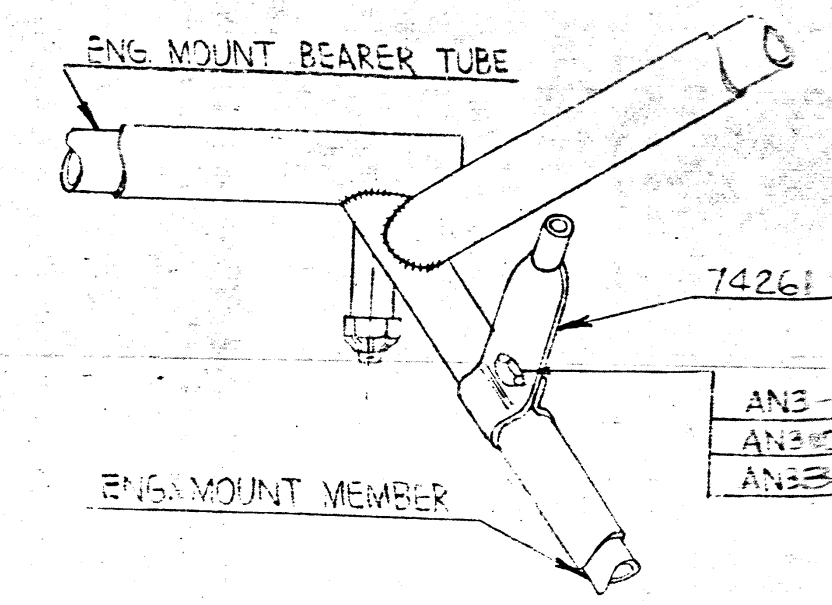
ENG. MOUNT BEARER TUBE
74261
AN3-4
AN310-3
AN380-2-2
ENG. MOUNT MEMBER
D

FIG. 1
ENGINE MOUNT LEFT COWL BRACE INSTALLATION

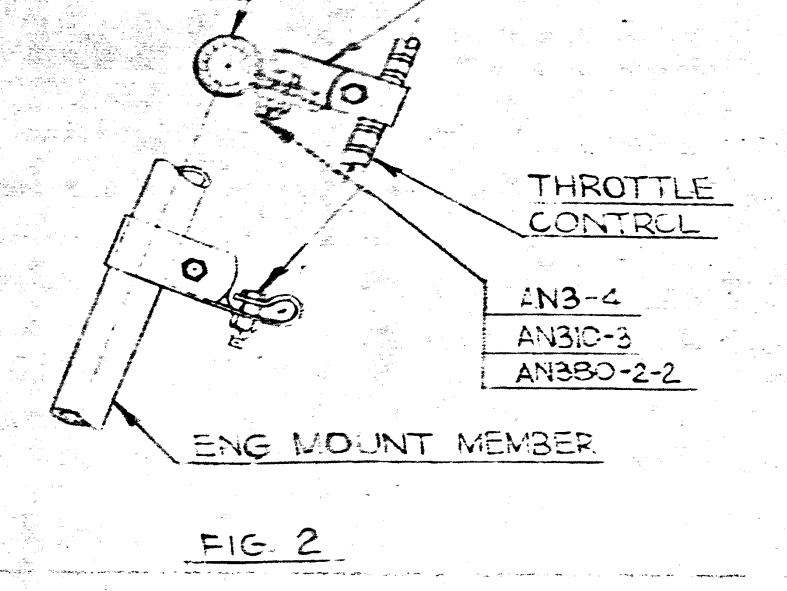
80002-53
72901
THROTTLE CONTROL
AN3-4
AN310-3
AN380-2-2
ENG. MOUNT MEMBER
C

FIG. 2
ENGINE MOUNT THROTTLE CLAMP INSTALLATION

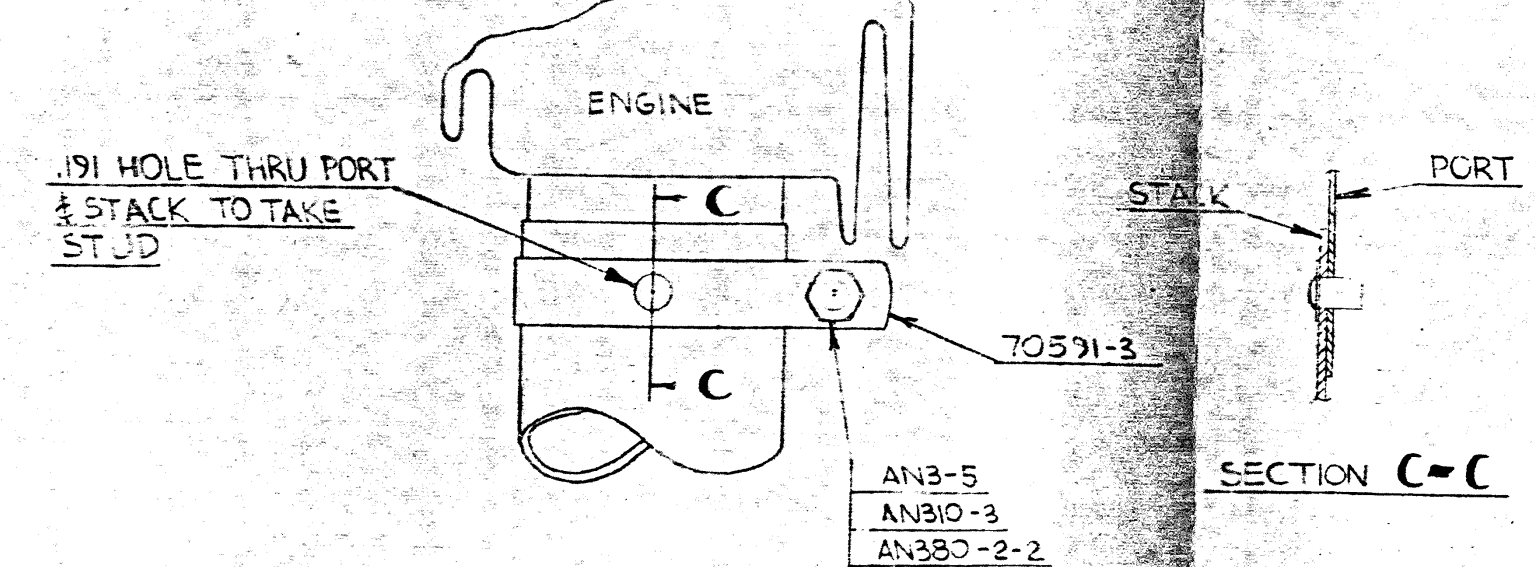
ENGINE
.191 HOLE THRU PORT & STACK TO TAKE STUD
70591-3
AN3-5
AN310-3
AN380-2-2
4 REQ.
C
STACK
PORT

SECTION C-C

FIG. 3
FULL SIZE

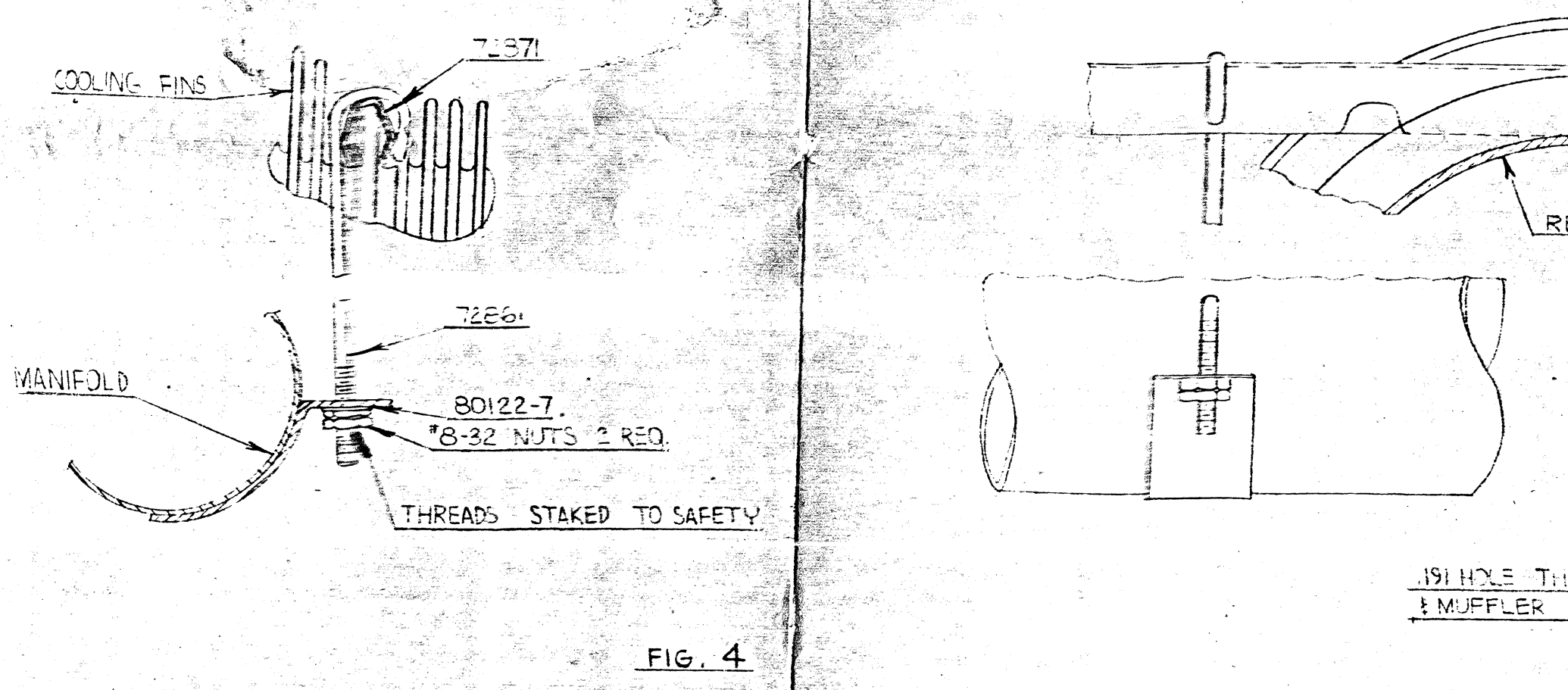
COOLING FINS
72871
72861
MANIFOLD
80122-7
#8-32 NUTS 2 REQ.
THREADS STAKED TO SAFETY
REAR CYLINDER

FIG. 4

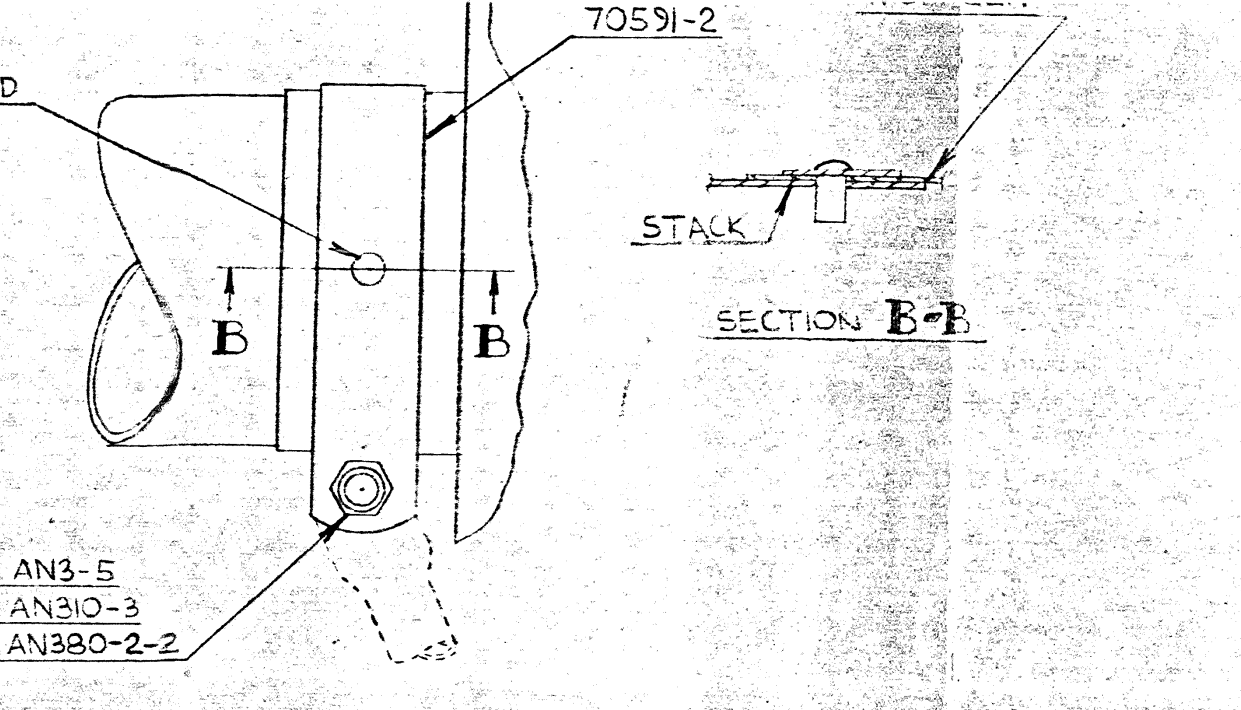
.191 HOLE THRU STACK & MUFFLER TO TAKE STUD
70591-2
B
AN3-5
AN310-3
AN380-2-2
MUFFLER
STACK

SECTION B-B

FIG. 5
FULL SIZE

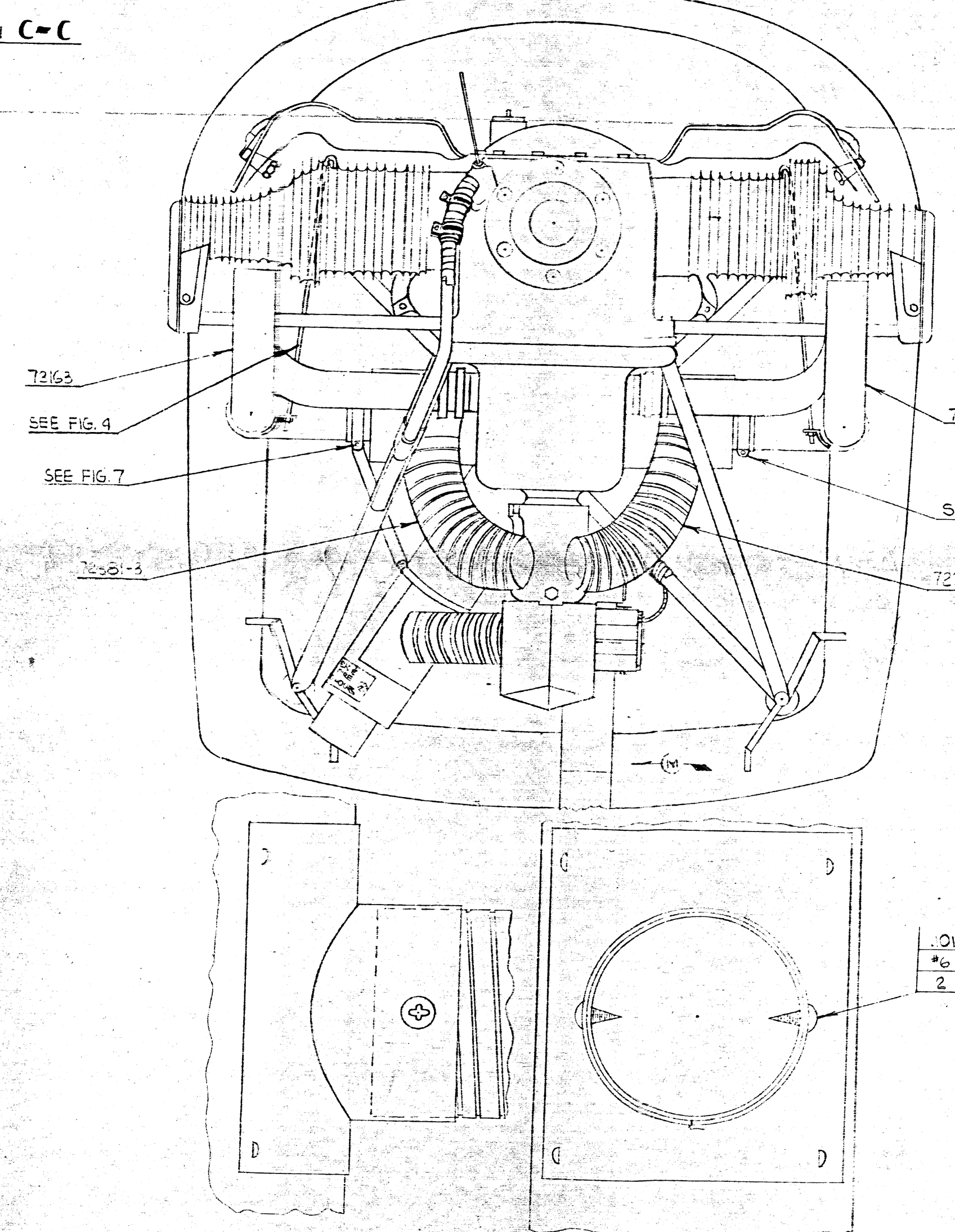
73163
SEE FIG. 4
SEE FIG. 7
72381-3
73043
SEE FIG. 5
72381-2
M
.101 HOLE
#6 PK. SCREW
2 REQ.

FIG. 13 TYPICAL FLEXIBLE TUBE END ATTACHMENT
FULL SIZE

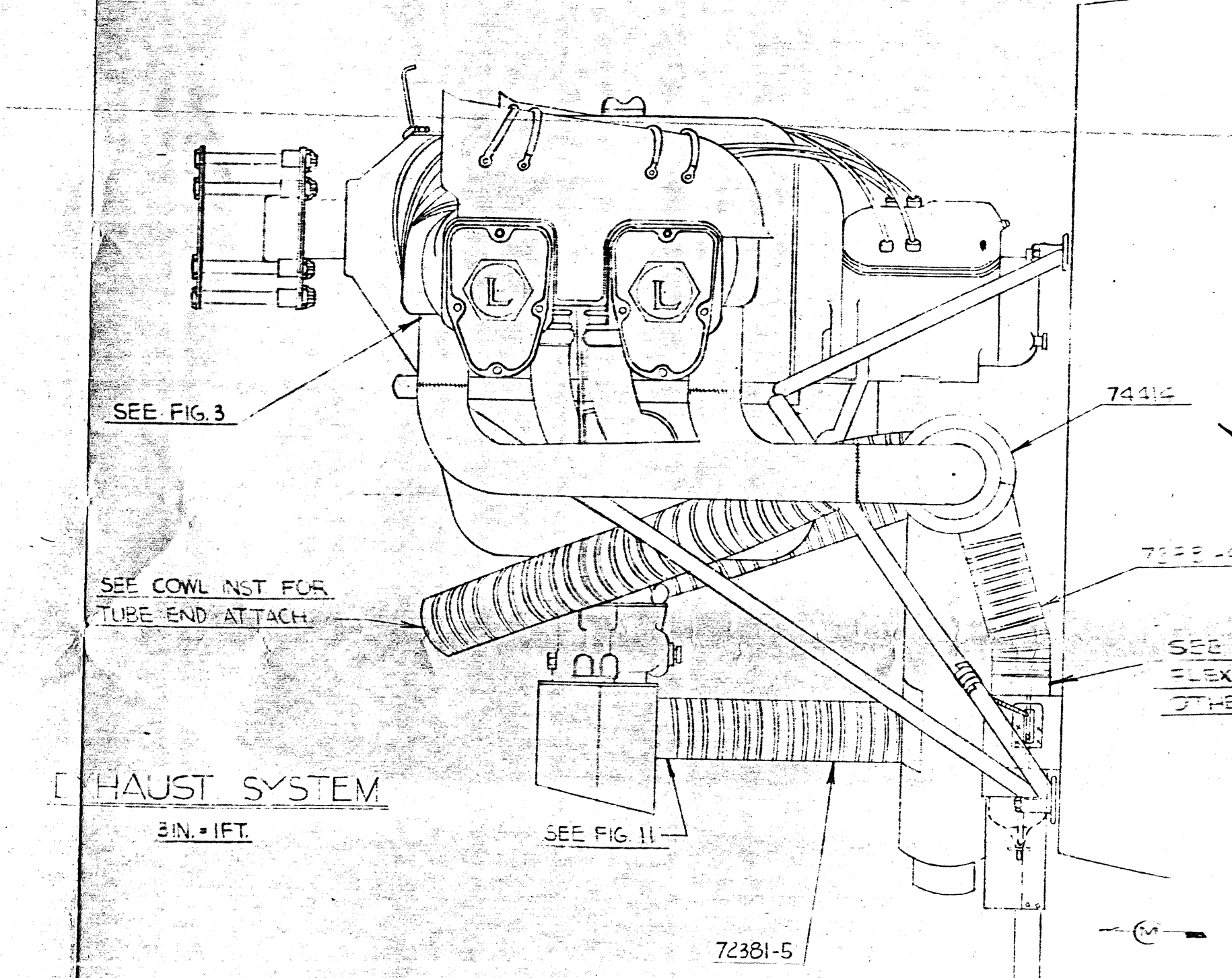
SEE FIG. 3
SEE COWL INST FOR TUBE END ATTACH.
74414
72381-4
SEE FIG. 13 FOR ATTACH. OF ALL FLEXIBLE TUBE ENDS UNLESS OTHERWISE NOTED.
SEE FIG. 11
72381-5
H
M

EXHAUST SYSTEM

3IN. = 1FT.

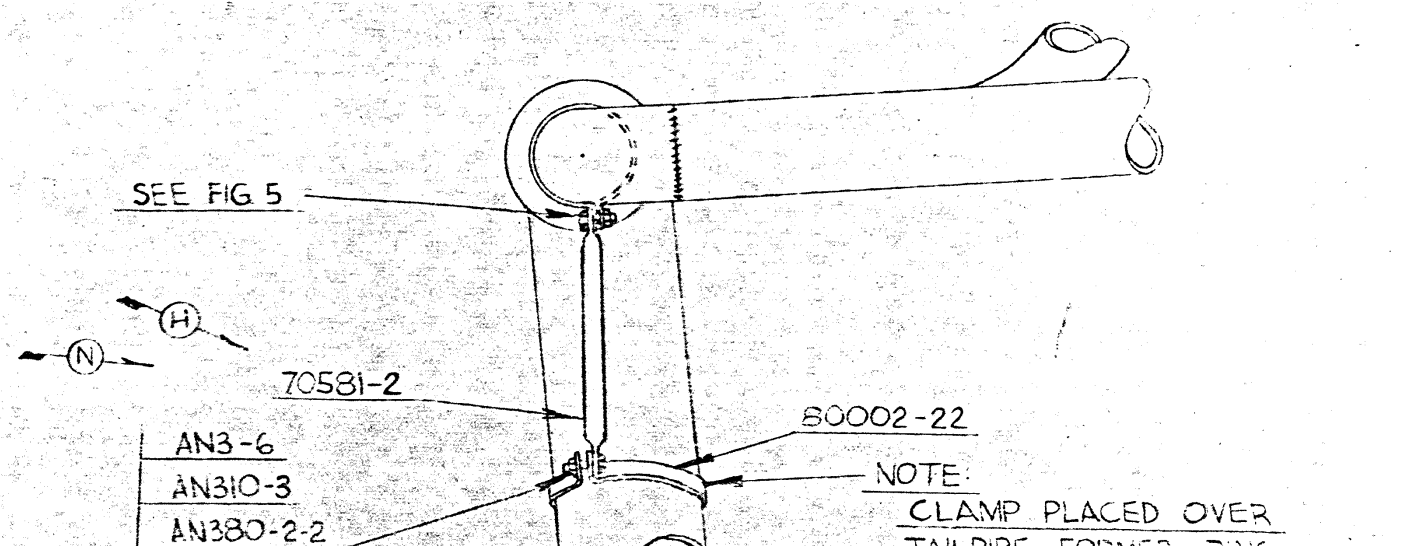
SEE FIG. 5
70581-2
AN3-6
AN310-3
AN380-2-2
80002-22
NOTE: CLAMP PLACED OVER TAILPIPE FORMER RING
H
N

FIG. 7
3IN. = 1FT.

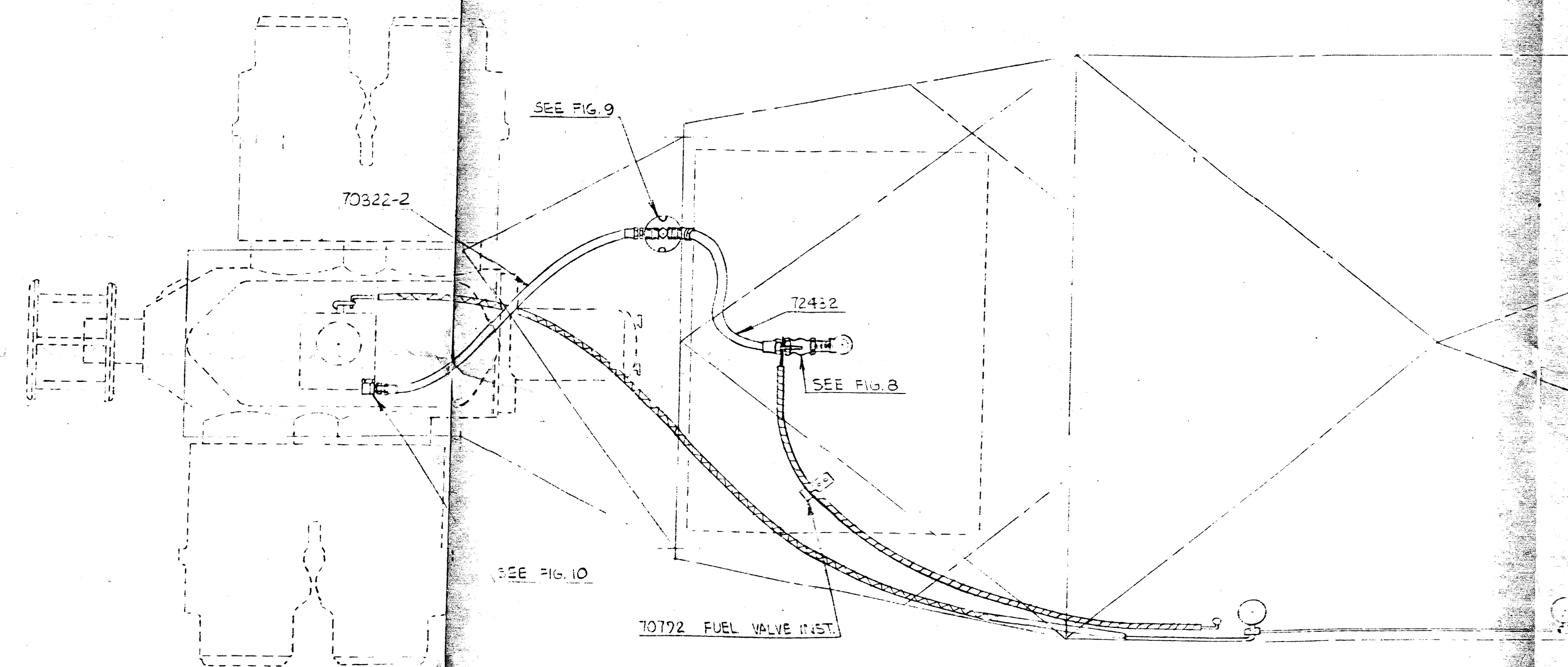
SEE FIG. 9
70322-2
72432
SEE FIG. 8
SEE FIG. 10
70792 FUEL VALVE INST.

FUEL SYSTEM

3IN. = 1FT.

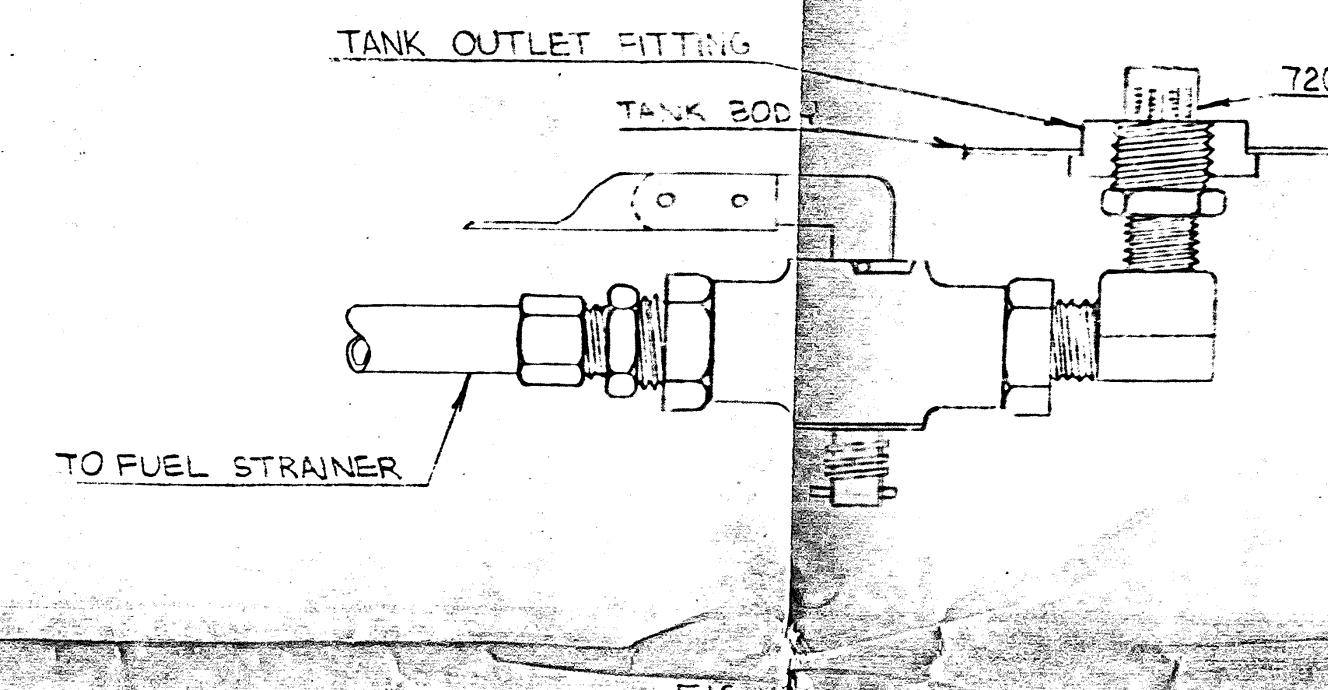
TANK OUTLET FITTING
TANK BODY
72091
TO FUEL STRAINER

FIG. 8
CONNECTIONS AT TANK OUTLET
FULL SIZE

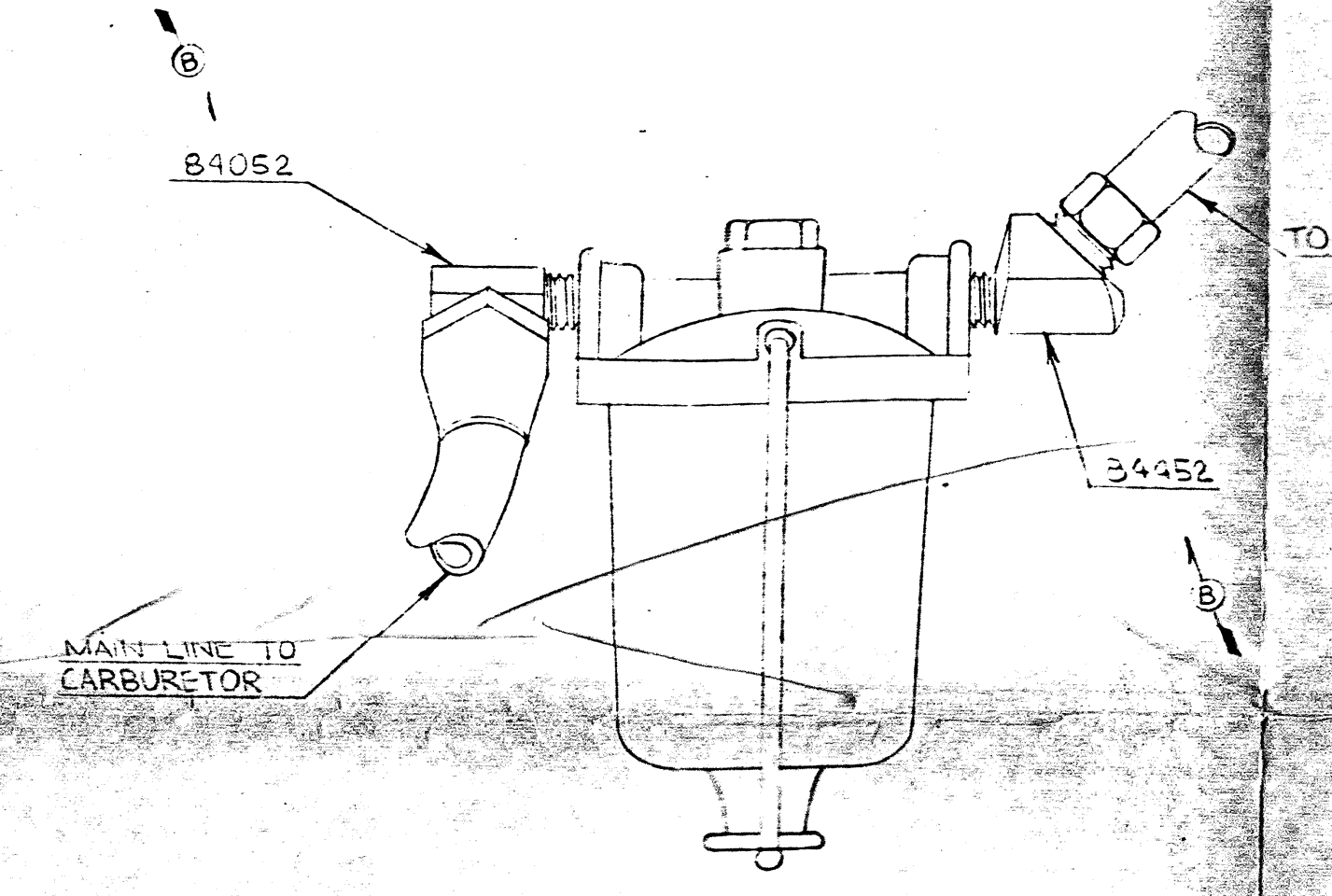
B
84052
TO TANK OUTLET
84452
MAIN LINE TO CARBURETOR

FIG. 9
CONNECTIONS AT FUEL STRAINER
FULL SIZE

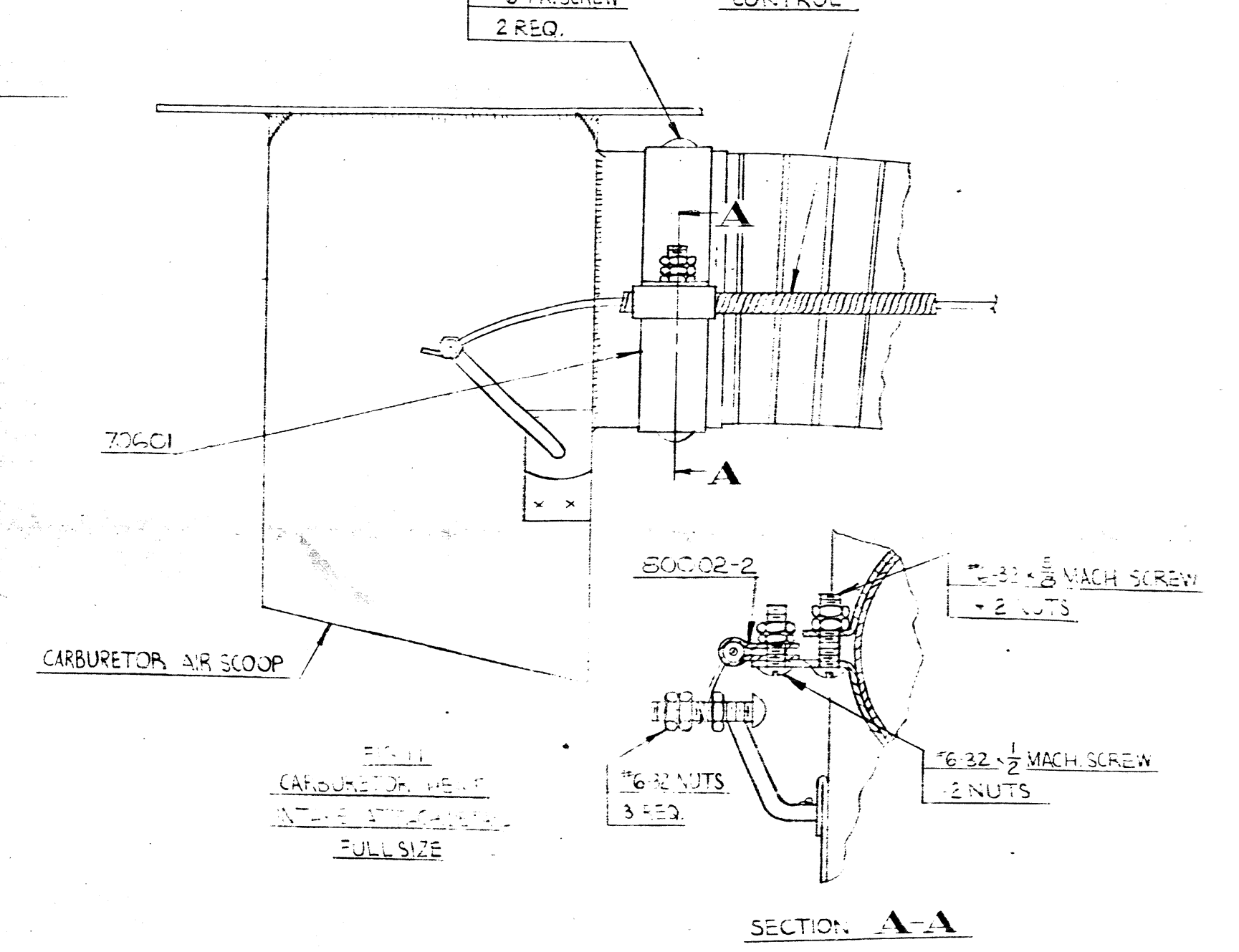
.101 HOLE
#6 PK. SCREW
2 REQ.
CARBURETOR HEAT CONTROL
A
70601
CARBURETOR AIR SCOOP
80002-2
#6-32 × 5/8 MACH. SCREW + 2 NUTS
#6-32 NUTS 3 REQ.
#6-32 × 1/2 MACH. SCREW 2 NUTS

FIG. 11
CARBURETOR HEAT INTAKE ATTACHMENT
FULL SIZE

SECTION A-A

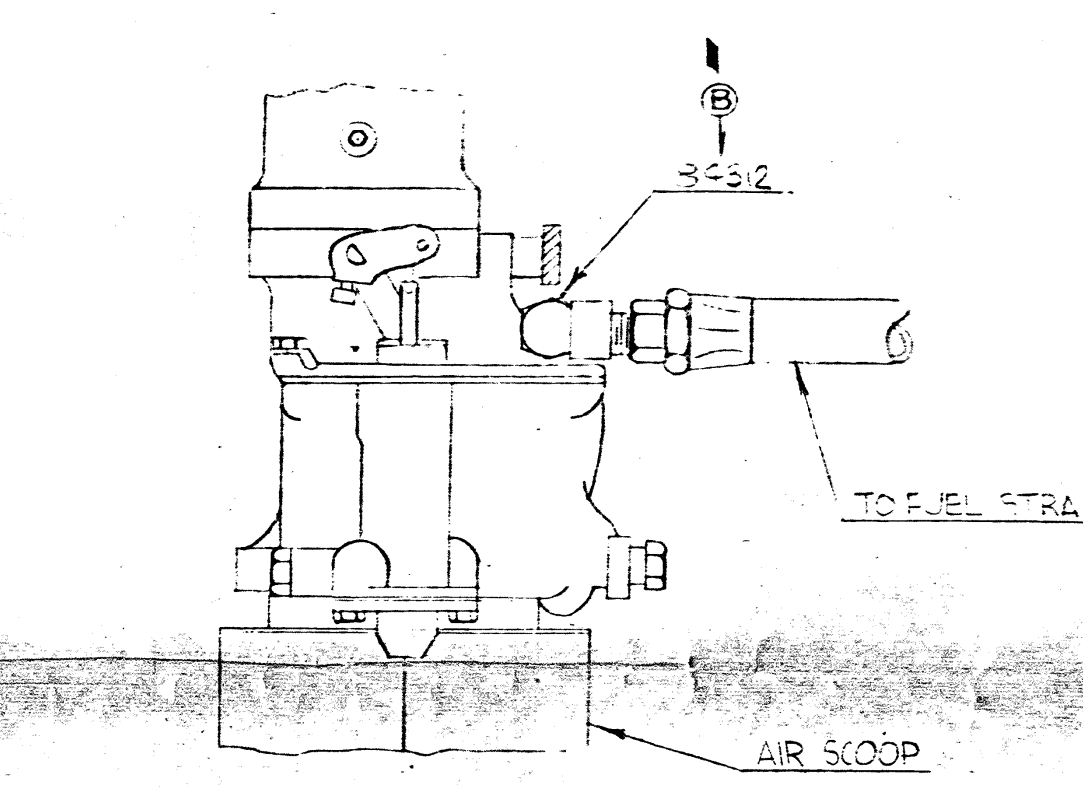
B
84312
TO FUEL STRAINER
AIR SCOOP

FIG. 10
CONNECTIONS AT CARBURETOR
HALF SIZE

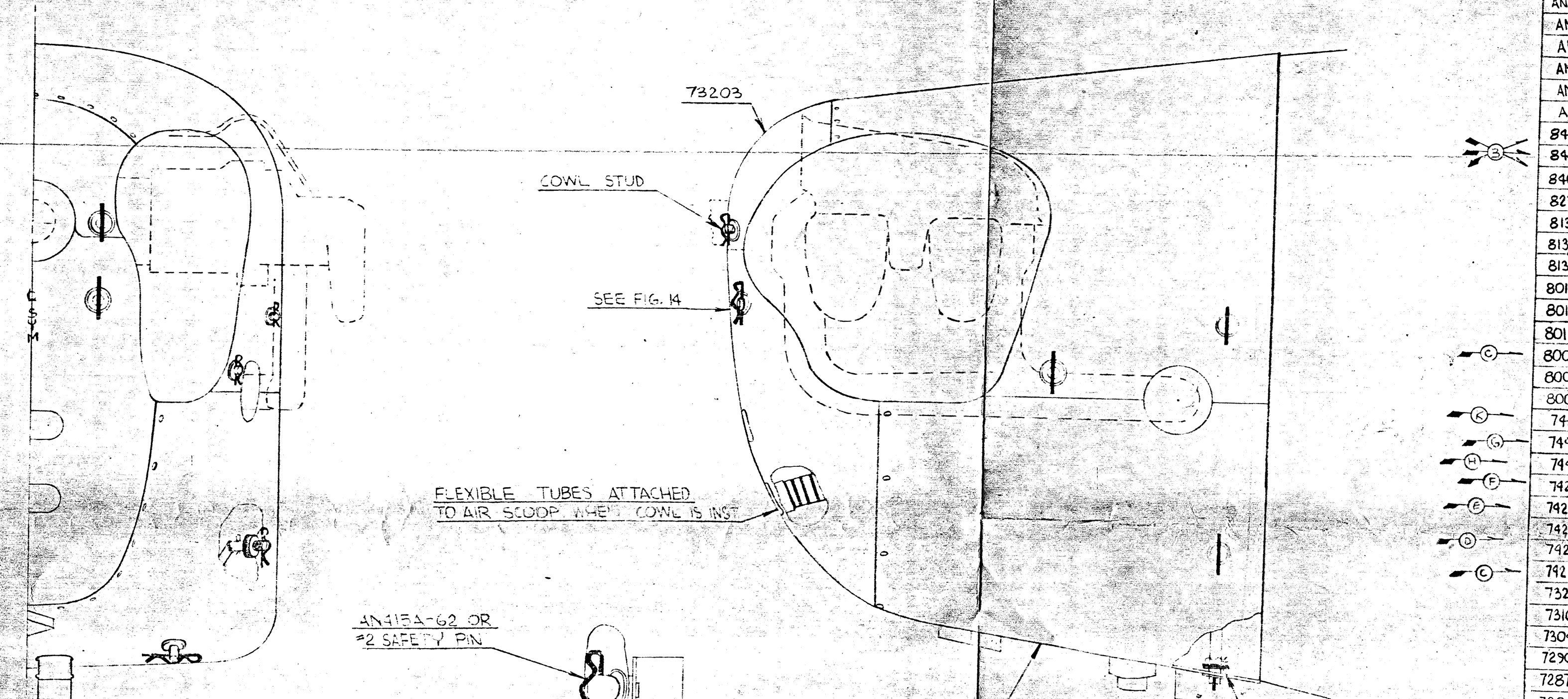
73203
COWL STUD
SEE FIG. 14
FLEXIBLE TUBES ATTACHED TO AIR SCOOP WHEN COWL IS INST.
74593
81342-23 OR 81342-36
AN380-3-3
8 REQ.
M
K

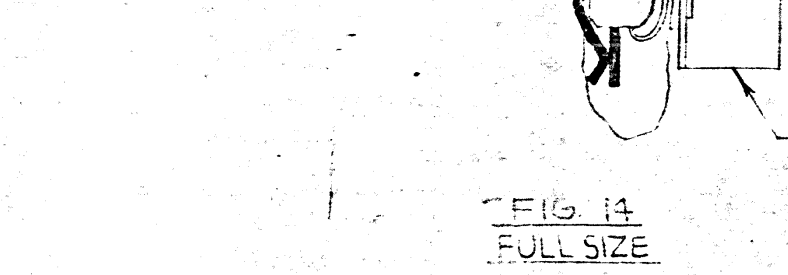
AN415A-62 OR #2 SAFETY PIN
COWL BRACKET

FIG. 14
FULL SIZE

COWL INSTALLATION

3 N. = 1FT.

* OPTIONAL EQUIPMENT FOR MODEL J3 REPLACING STANDARD POWER PLANT 74143

PART No.	No. REQ.	SIZE	DESCRIPTION
	1		LYCOMING ENGINE O145-A1 A2, OR A3 OR ENGINE O145-B1, B2, OR B3 PURCH. LYCOMING DIVISION - THE AVIATION CORP.
	1		PROPELLER 70-LY-34 PURCH. SENSENICH BROS.
	1	1/16 × 1 × 20	ASBESTOS TAPE OR FELT
	1	3/4 × 36 LONG	FRICTION TAPE
	2		7/8 IN. HOSE CLAMP
#10	2		WASHER
#10-32	4		PLAIN NUT
#8-32	4		PLAIN NUT
#6-32	7		PLAIN NUT
#10-32	3	3/4 LONG	*1010 ST'L. CD. PLATED RD. HD. MACH. SCREW
#6-32	1	1/2 LONG	
#6-32	1	5/8 LONG	
#6	12	3/8 LONG	TYPE "A" STOVE HD. PK. SCREW
#2 OR	12		SAFETY PIN PURCH. AIR ASSOCIATES
AN415A-62	12		CLIP
AN380-3-3	16		COTTER PIN
AN380-2-2	14		COTTER PIN
AN310-6	8		NUT
AN310-3	14		NUT
AN6-34	4		BOLT
AN6-24	4		BOLT
AN3-6	3		BOLT
AN3-5	6		BOLT
AN3-4	5		BOLT
84452	1		45° ELBOW
84312	1		INVERTED MALE ELBOW
84052	1		STREET ELBOW
82332-14	1		OIL PRESSURE LINE
81342-37	8		WASHER
81342-36 OR 81342-23	8		WASHER
80132-24	1		TUBE
80122-43	4		WASHER
80122-7	2		WASHER
80002-53	1		CLAMP
80002-22	1		CLAMP
80002-2	1		CLAMP
74593	1		BOTTOM COWL ASSEMBLY
74433	1		FIREWALL ACCESS. INST.
74414	1		MUFFLER ASS'Y.
74281	1		CONNECTOR HOSE
74271	1		RIGHT COWL BRACE
74261	1		LEFT COWL BRACE
74251	1		NOSECOWL BRACKET ASS'Y.
74234	1		ENGINE MOUNT ASS'Y.
73203	1		TOP COWL ASS'Y.
73163	1		RIGHT EXHAUST STACK ASS'Y.
73043	1		LEFT EXHAUST STACK ASS'Y.
72901	1		CLAMP
72871	2		CHANNEL
72861	2		HANGER
72432	1		FUEL LINE
72381-5	1		TUBE
72381-4	1		TUBE
72381-3	1		TUBE
72381-2	1		TUBE
72091	1		FINGER STRAINER ASS'Y.
71851	1		CLAMP
72791-2 OR 71061	1		HOSE ASS'Y.
70792	1		FUEL VALVE INST.
70601	1		CLAMP
70591-3	4		CLAMP ASS'Y.
70591-2	2		CLAMP ASS'Y.
70581-2	1		BRACE
70562	1		CARB. AIR SCOOP ASS'Y.
70322-2	1		FLEXIBLE FUEL LINE

MATERIAL
SCALE HALF SIZE & NOTED | TOTAL WT.-LBS.
FINISH-PIPER SPECIFICATION #10
MANUFACTURING PRACTICES-PIPER SPECIFICATION #9

"This drawing is the property of the Piper Aircraft Corp. and its possession by unauthorized persons shall not be construed as permission to reproduce for sale, in whole or in part, any devices shown thereon."

LET	REVISION	DATE	BY
Q	REDRAWN WITHOUT CHANGE	11-4-46	L.R.
P	84742 REMOVED	4-26-46	C.E.K.
O	TACH SHAFT REM. FROM B.M.	12-13-44	H.M.Z.
N	VIEW 70591-2 REVISED	2-3-44	A.I.N.
M	HEATER VIEWS REV.	1-27-44	CHS
L	J3L N.A. 83983 WAS 83463	1-27-44	CHS

LET	REVISION	DATE	BY
K	74593 WAS 73223	12-6-43	R.E.S.
J	ASTERISK; NOTE ADDED	10-18-43	F.J.D.
H	74414 WAS 10873-2; 70591-2 WAS 70581	9-16-43	J.E.C.
G	74433 WAS 70203	9-15-43	W.G.T.
F	74281 WAS 72393-2	7-2-43	C.K.
E	74271 WAS 73051	6-15-43	MGS
D	74261 WAS 73061; 74251 WAS 73141	6-15-43	MGS
C	74234 WAS 72774; 80002-53 WAS 80002-9	6-11-43	M.G.S.
B	PIPER PART NO. WAS PURCH. PART NO.	5-17-43	RES.
A	ASBESTOS TAPE & NOTE ADDED	4-14-43	R.R.F.

MODEL	PER PLANE	NEXT ASSEMBLY	SUPERSEDES	SUP. BY
			D7012-C	
			D7564-C	
J3-LG5*	1	83983	D7442-C	

PIPER AIRCRAFT CORP.
LOCK HAVEN, PENNA.

POWER PLANT

DRAFTSMAN	CHECKER	STANDARDS
McRAE 9-24-42	L.E.K. 12-8-42	

73006

K New M J L KBEF DHCG